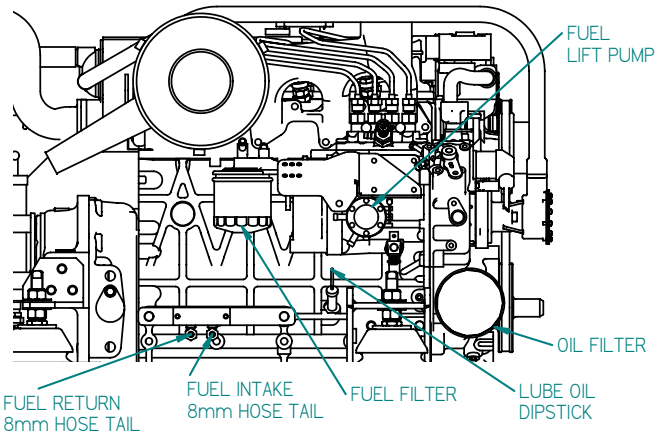

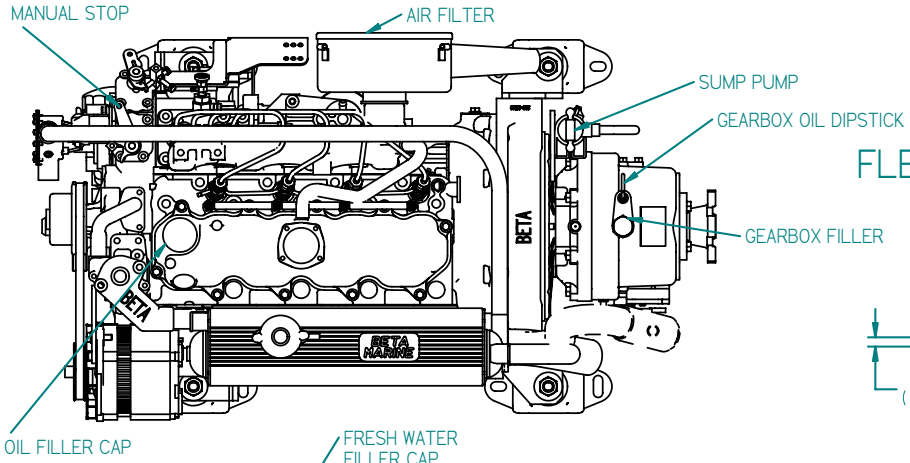

FLEXIBLE MOUNT

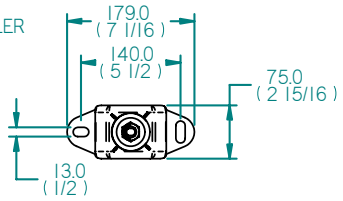

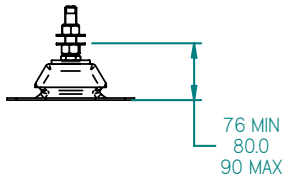

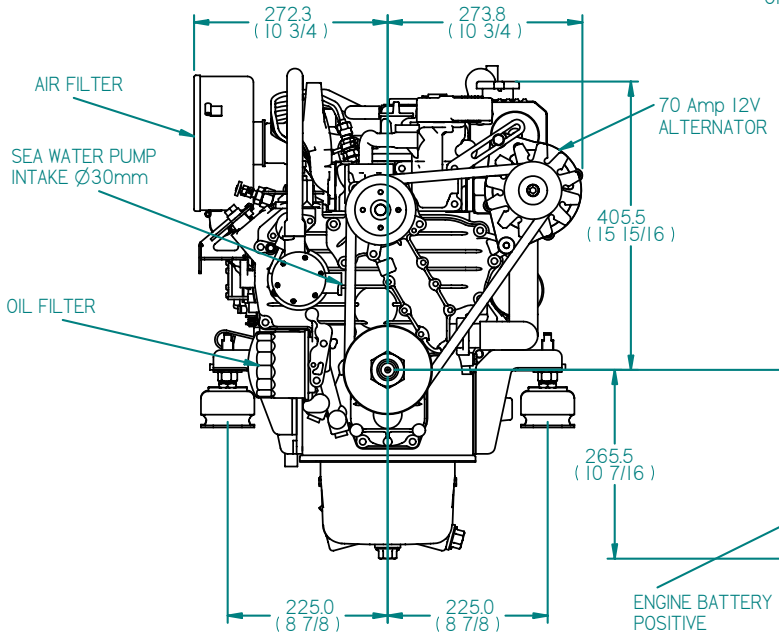

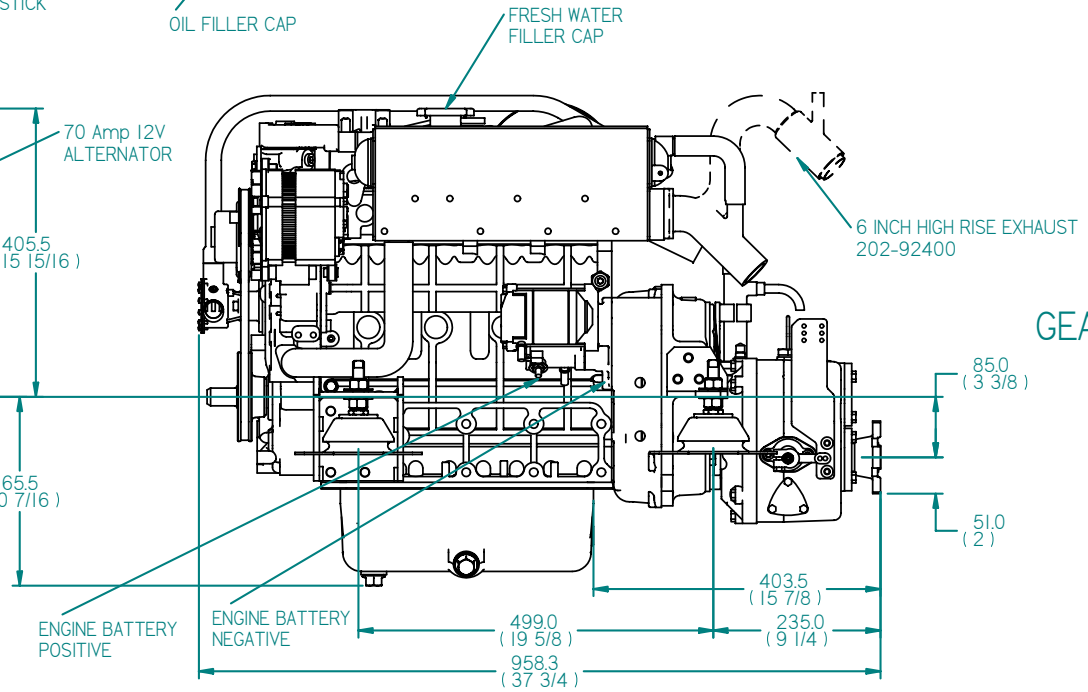

GEARBOX OUTPUT

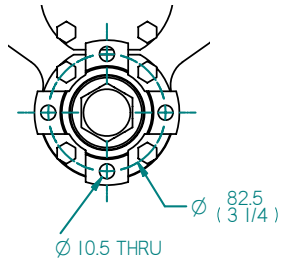

REV	DESCRIPTION	DATE	APP'D	DRAWN
01				

NOTES

TITLE:

BETA 43-50 HEAT EXCHANGE TMC260 GEARBOX

DIMENSIONS IN MM (INCH) DO NOT SCALE

PART FILE NAME: 100-05274 BETA50 HE TMC260.asm

BETA MARINE

TEL: (01452) 723492 FAX: (01452) 729916

BETA MARINE LTD, DAVY WAY, WATERWELLS, QUEDGELEY, GLOUCESTER. GL2 2AD, UK

DRAWN BY: TW	SIZE A4	DWG NO: 100-05274	REV 00
CHECKED BY: LT	SCALE NTS	PAGE 1 of 1	DATE 16/07/2009