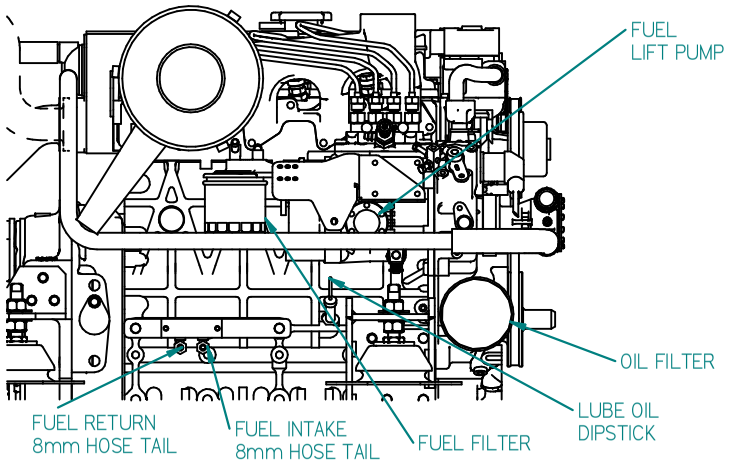

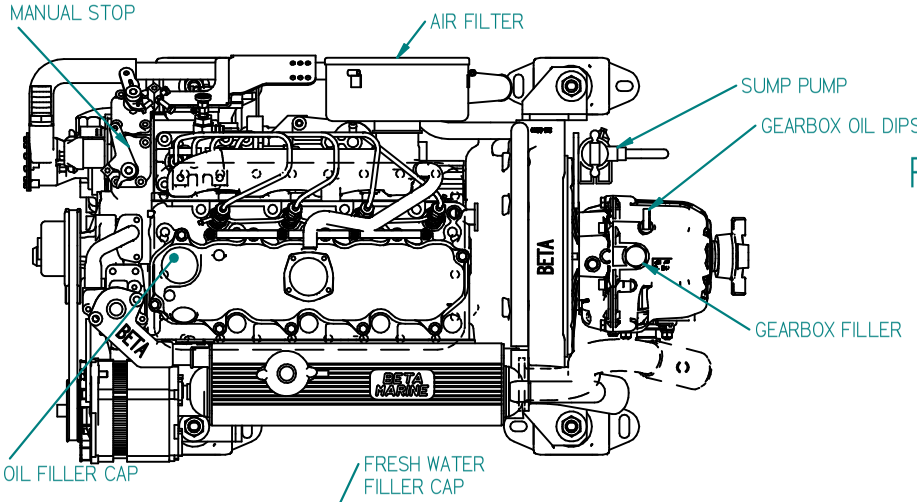

FLEXIBLE MOUNT

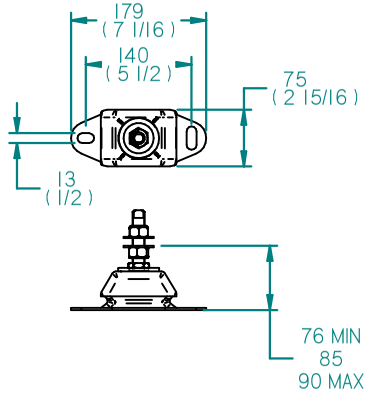

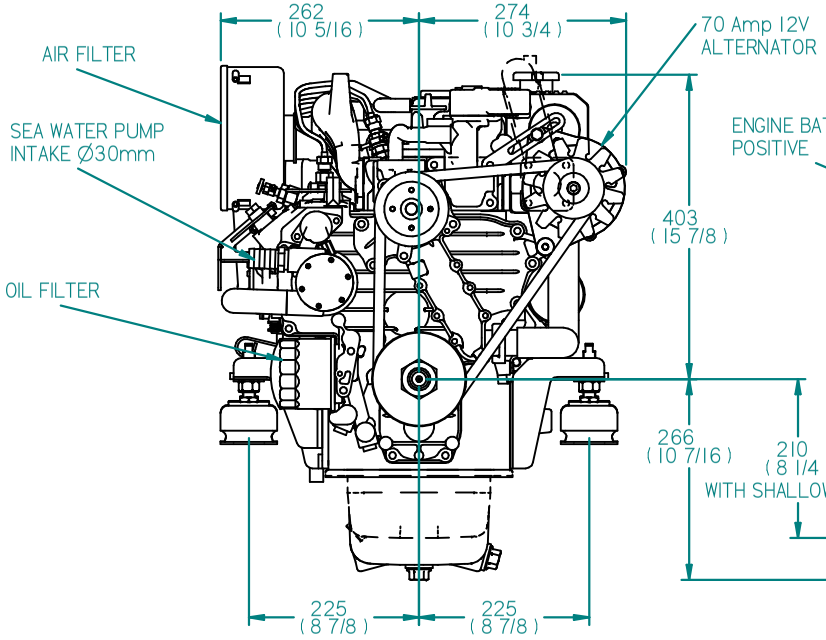

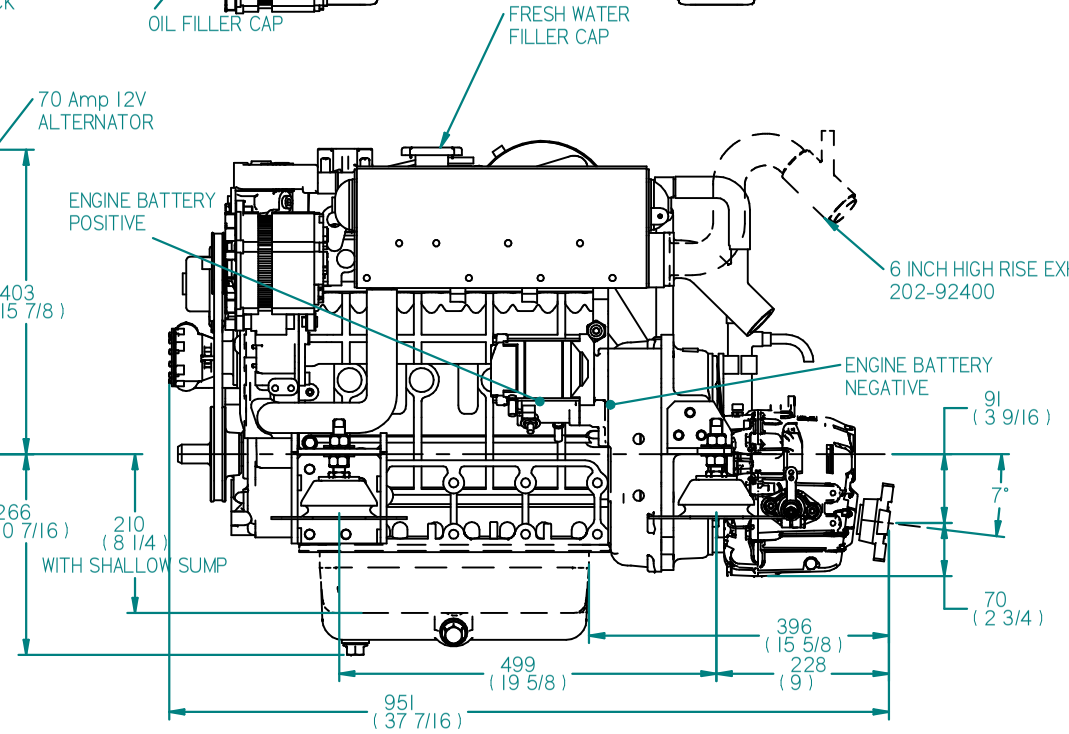

GEARBOX OUTPUT

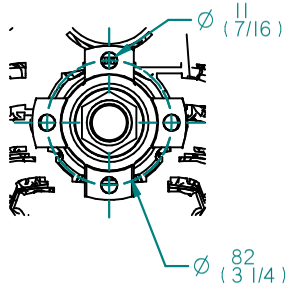

REV	DESCRIPTION	DATE	APP'D	DRAWN
01	New sea water pipe	06/11/10	LT	TW

NOTES

TITLE:

BETA 43 HEAT EXCHANGE TMC60A GEARBOX

DIMENSIONS IN MM (INCH)
DO NOT SCALE

PART FILE NAME: 100-09087 B43 HE TMC60A.asm

BETA MARINE
TEL: (01452) 723492 FAX: (01452) 729916
BETA MARINE LTD,
DAVY WAY,
WATERWELLS,
QUEDGELEY,
GLOUCESTER. GL2 2AD, UK

DRAWN BY:	SIZE	DWG NO:	REV
TW	A4	100-09087	00
CHECKED BY: LT	SCALE NTS	PAGE 1 of 1	DATE 17/11/2010